Assembling Instruction

A X 5	B X 1
C X 1	D X 1
E X 1	F X 1
G X 2	H X 10
I X 6 (6x40) MM	J X 4 (6x65) MM
K X 3 (8x40) MM	M X 1 (6) MM
L X 1 (5) MM	N X 1
O X 3 (4*25) MM	

01

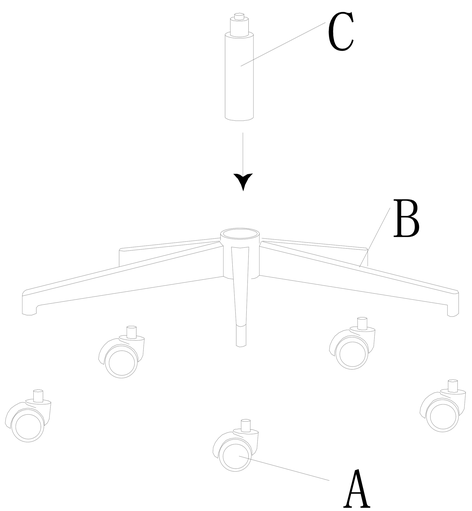

02

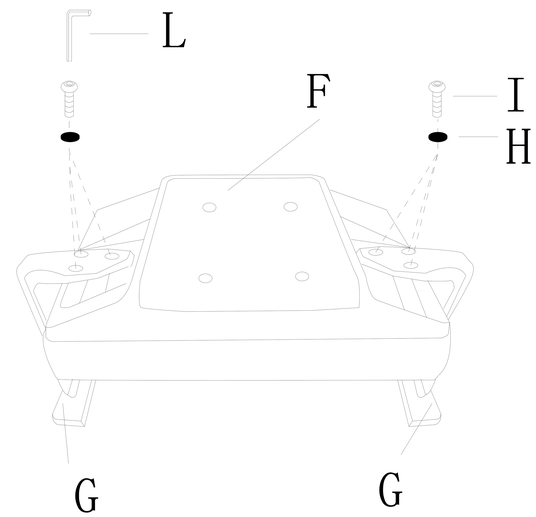

03

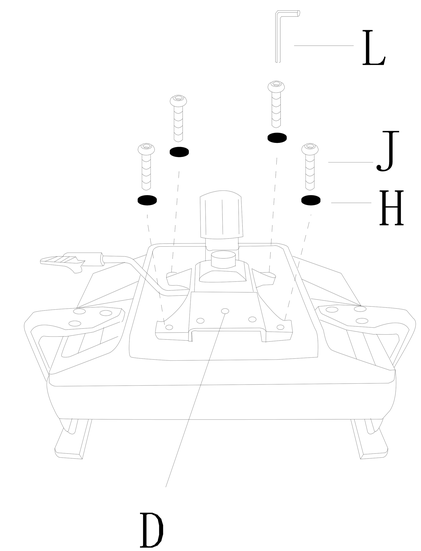

04

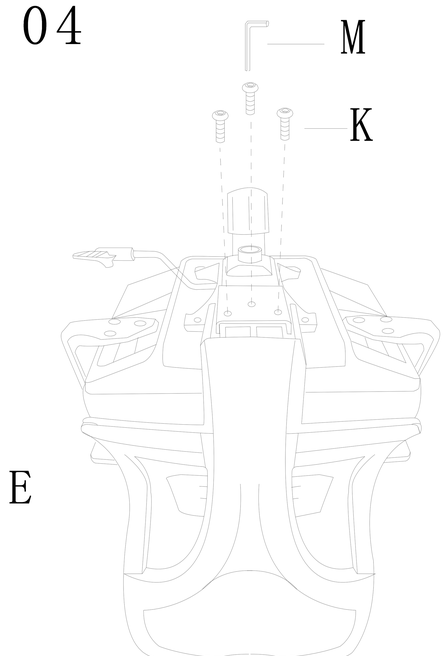

05

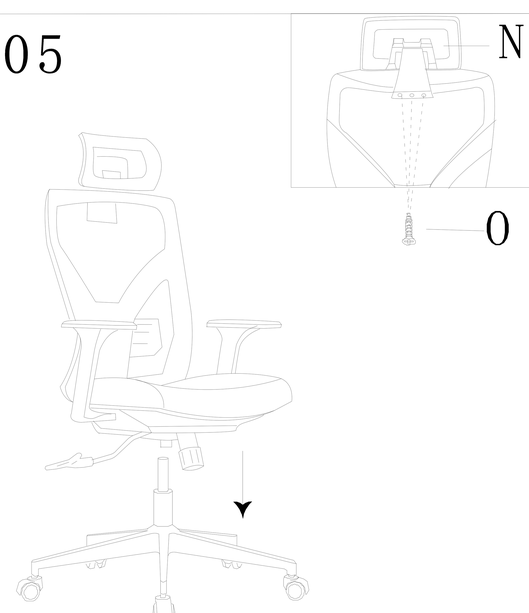

06