Assembling Instruction

A X 5	B X 1
C X 1	D X 1
E X 1	F X 1
G X 2	H X 10
IX6 (6x 45)MM	JX4 (6x 65)MM
K X 3 (8*20)MM	L X 1(5)MM
M X 1(6)MM	N X 1
O X 2 (4*25)MM	

01

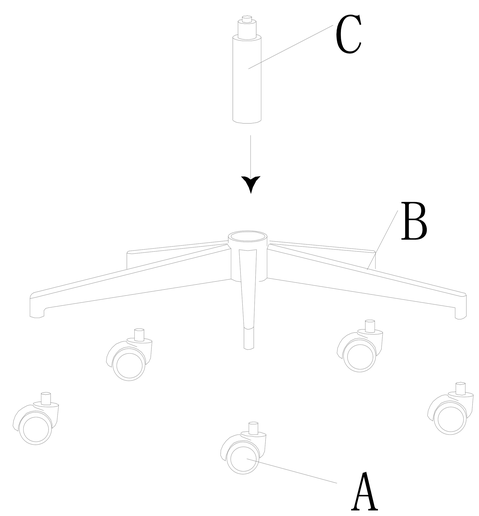

02

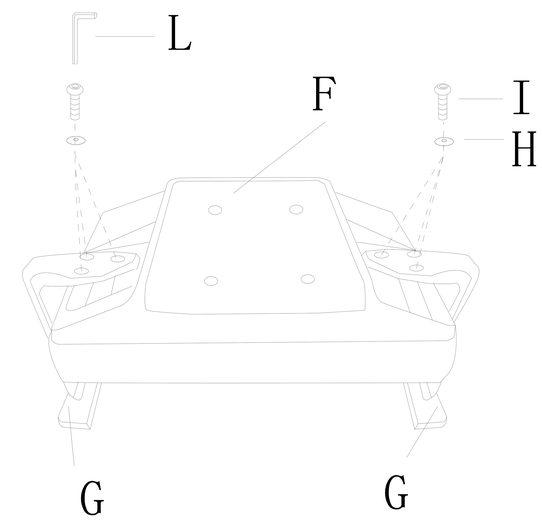

03

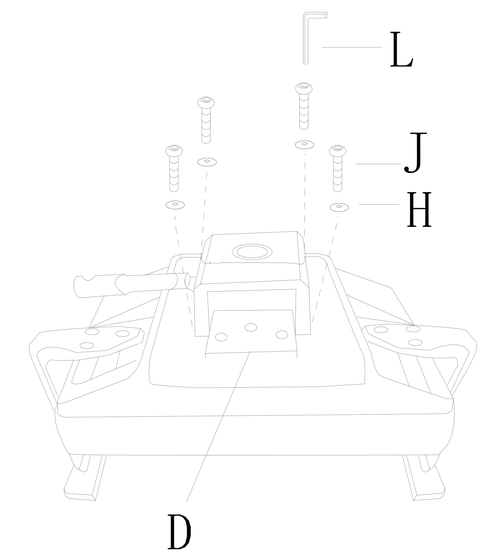

04

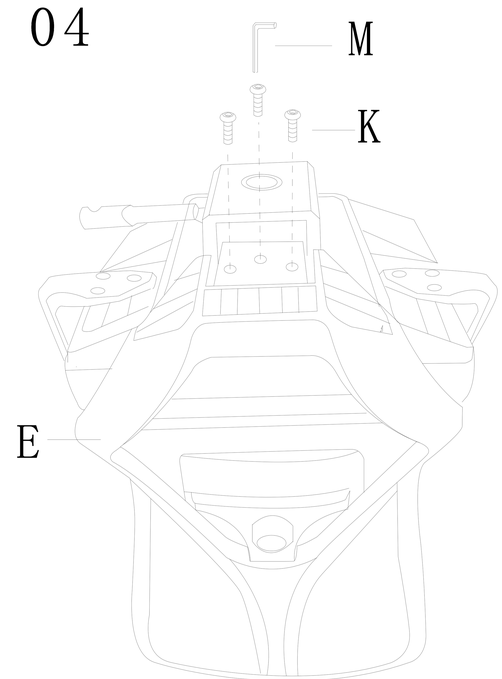

05

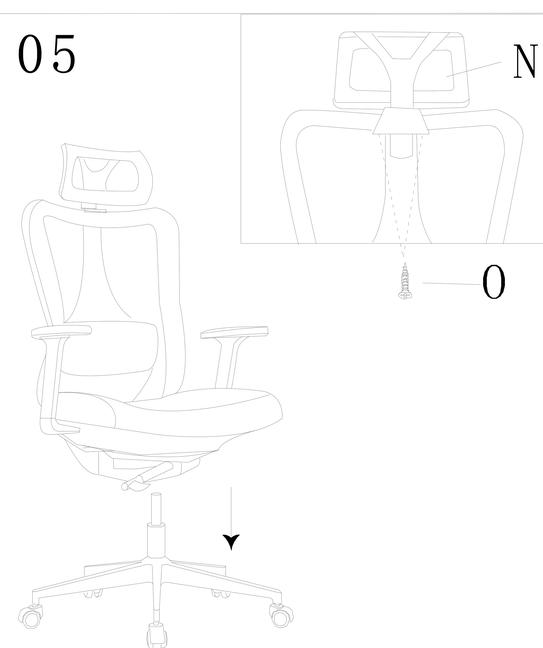

06