Assembling Instruction

A X 5	B X 1
C X 1	D X 1
E X 1	F X 2
G X 1	H X 4 (6x20)MM
I X 6 (6x30)MM	JX 3 (6x40)MM
K X 13	L X 1(5)MM
M X 1	N X 2 (4x20)MM

01

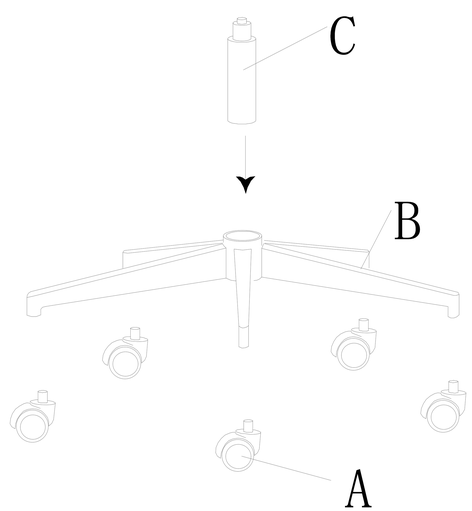

02

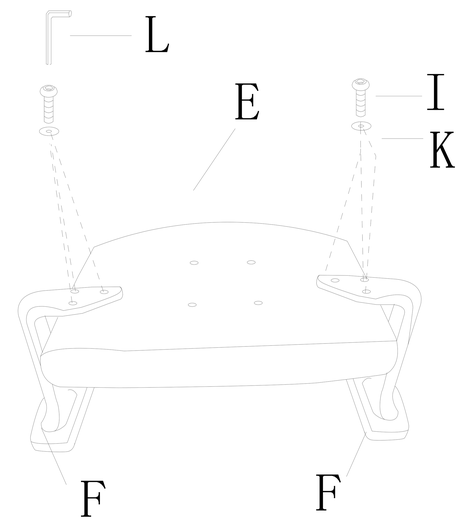

03

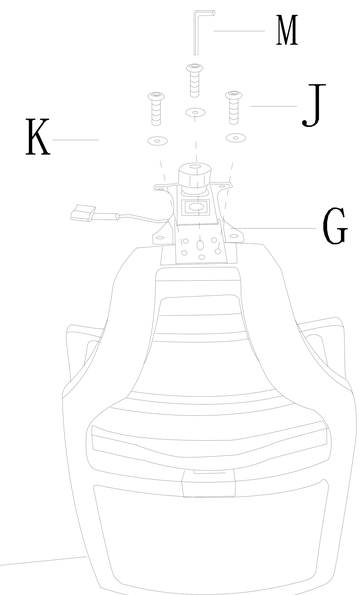

04

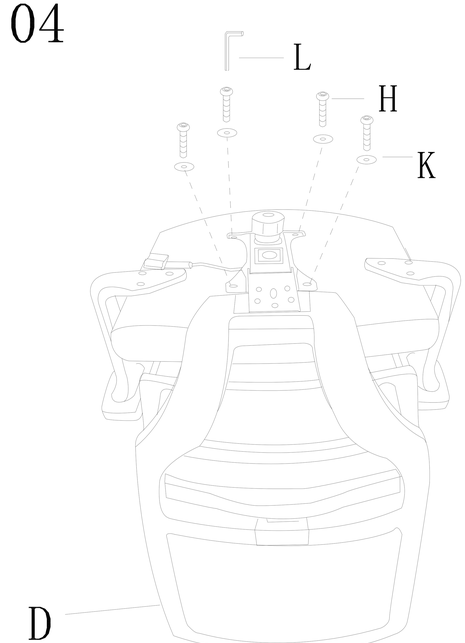

05

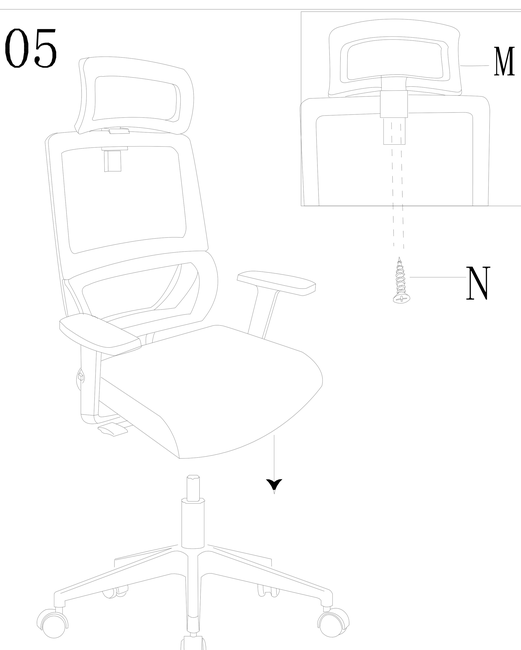

06